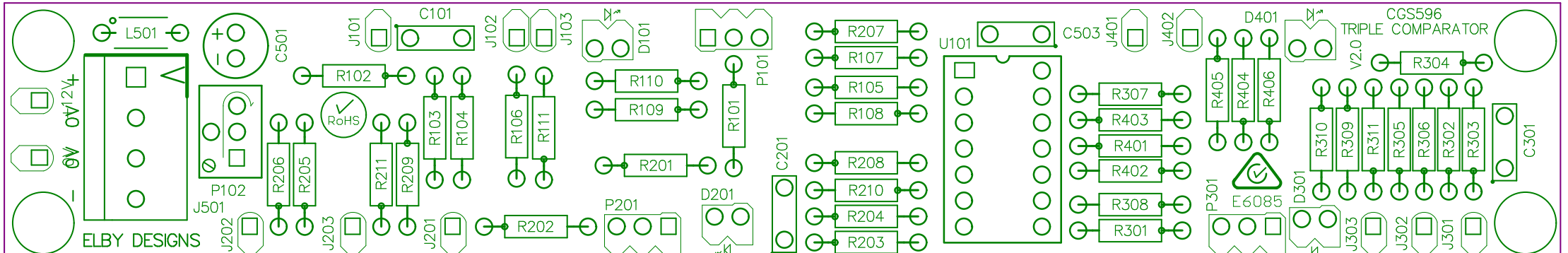
CGS596
TRIPLE COMPARATOR
V2.0
ELBY DESIGNS
L501
C501
C101
J101
J102
J103
D101
P101
R102
R103
R104
R106
R111
R110
R109
R101
R201
R202
R206
R205
R211
R209
P102
J501
J202
J203
J201
P201
D201
C201
R207
R107
R105
R108
R208
R210
R204
R203
U101
C503
J401
J402
R307
R403
R401
R402
R308
R301
P301
D401
R405
R404
R406
E6085
D301
R304
R310
R309
R311
R305
R306
R302
R303
C301
J303
J302
J301
RoHS
0V
12V
0V