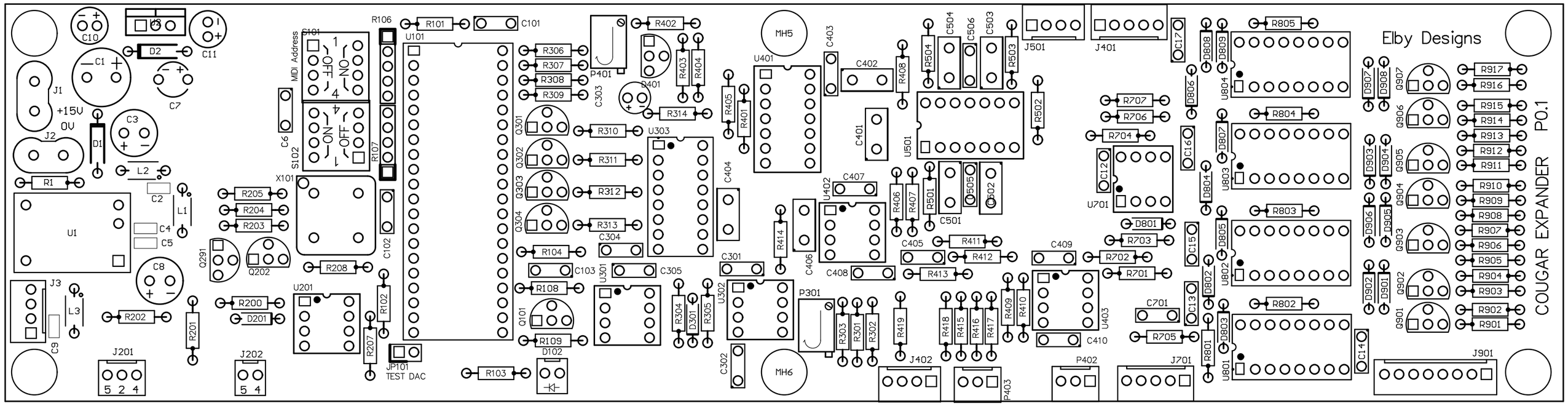
Elby Designs
COUGAR EXPANDER P0.1
MIDI Address
+15V
0V
TEST DAC