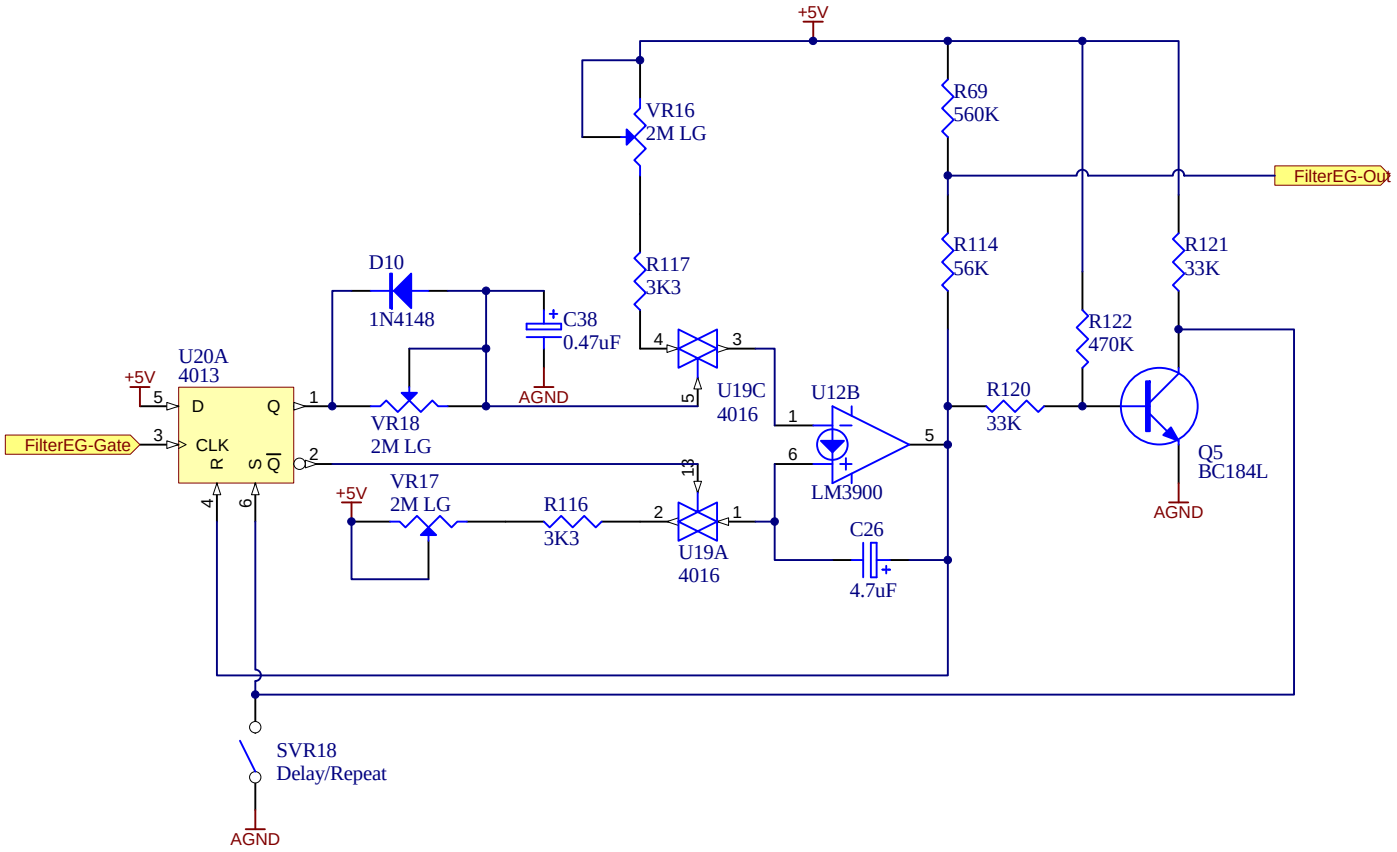

Elby Designs

9 Follan Close
Kariong
NSW 2250
Australia

EDP WASP

VCF Envelope Generator

Size	FCSM No.	DWG No.	Rev
A4	18/11/2007	VCF-EG.schdoc	1
Scale	Laurie Biddulph	Sheet 7 of 15	