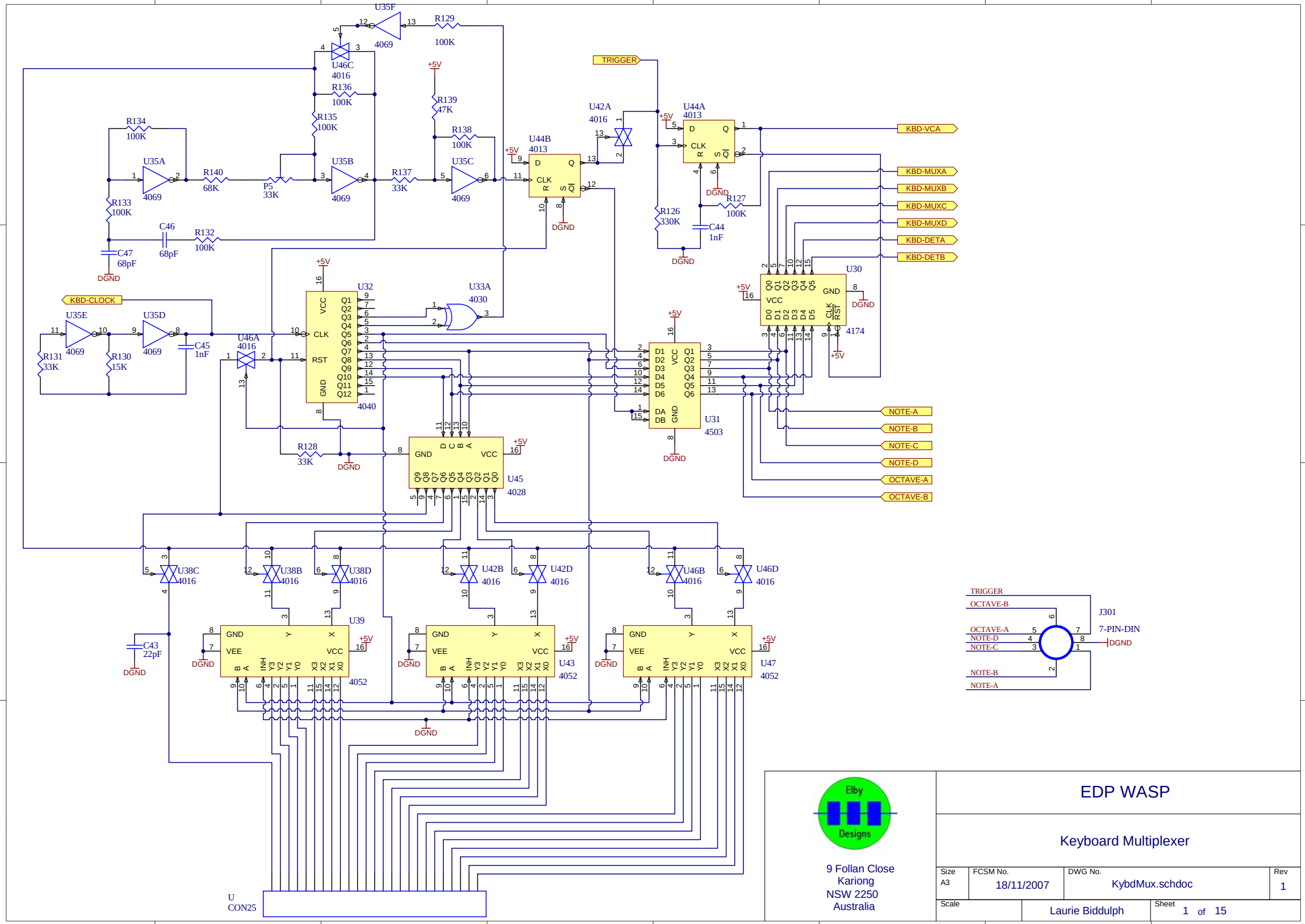
U35F
4069
R129
100K
U46C
4016
R136
100K
R135
100K
R139
47K
R138
100K
R134
100K
U35A
4069
R140
68K
P5
33K
U35B
4069
R137
33K
U35C
4069
R133
100K
C46
68pF
R132
100K
C47
68pF
DGND
+5V
TRIGGER
U42A
4016
U44B
4013
U44A
4013
KBD-VCA
KBD-MUXA
KBD-MUXB
KBD-MUXC
KBD-MUXD
KBD-DETA
KBD-DETB
R126
330K
C44
1nF
R127
100K
U30
4174
KBD-CLOCK
U35E
4069
U35D
4069
R131
33K
R130
15K
C45
1nF
U46A
4016
U32
4040
U33A
4030
U31
4503
R128
33K
U45
4028
NOTE-A
NOTE-B
NOTE-C
NOTE-D
OCTAVE-A
OCTAVE-B
U38C
4016
U38B
4016
U38D
4016
U42B
4016
U42D
4016
U46B
4016
U46D
4016
U39
4052
U43
4052
U47
4052
C43
22pF
U
CON25
J301
7-PIN-DIN
TRIGGER
OCTAVE-B
OCTAVE-A
NOTE-D
NOTE-C
NOTE-B
NOTE-A
Elby
Designs
9 Follan Close
Kariong
NSW 2250
Australia
EDP WASP
Keyboard Multiplexer
Size
A3
FCSM No.
18/11/2007
DWG No.
KybdMux.schdoc
Rev
1
Scale
Laurie Biddulph
Sheet
1 of 15