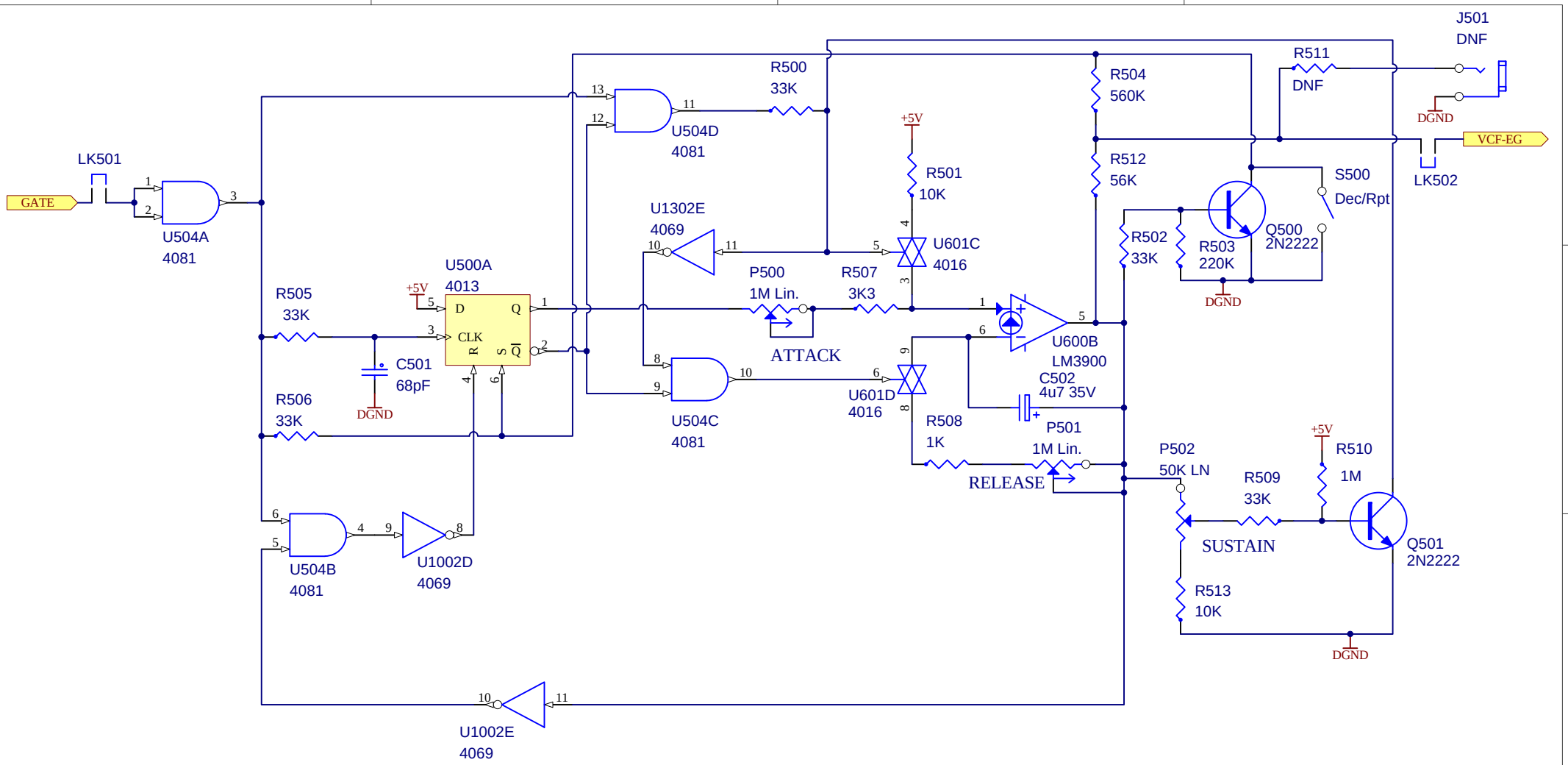

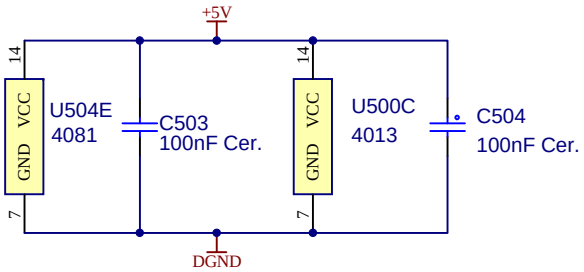

Elby Designs

9 Follan Close
Kariong
NSW 2250
Australia

Pixie - An EDP WASP Clone

Envelope Generator for VCF

Size	FCSM No.	DWG No.	Rev
A4	24/03/2008	VCF-EG.s05	1
Scale	Laurie Biddulph	Sheet 5 of 21	