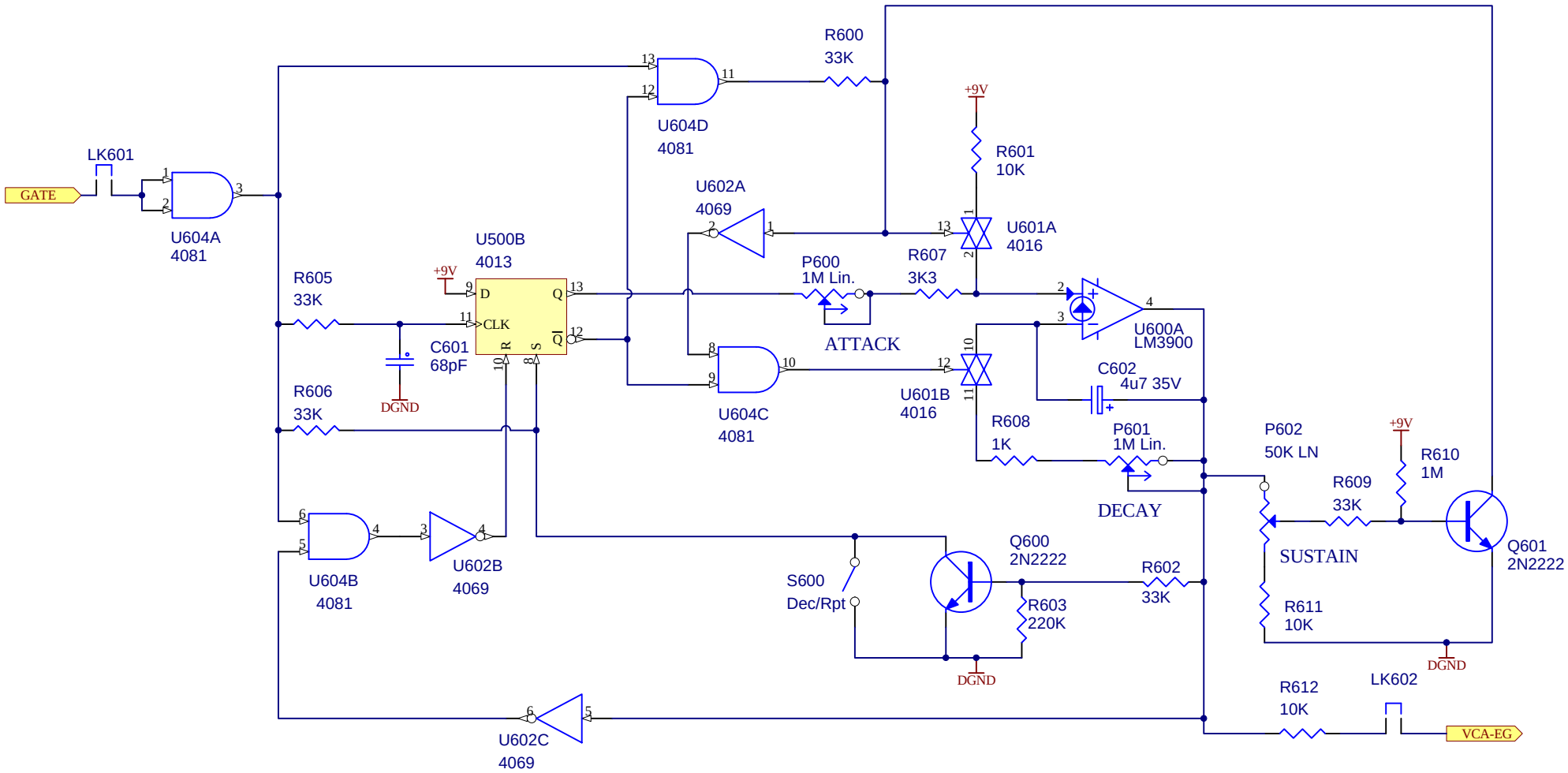

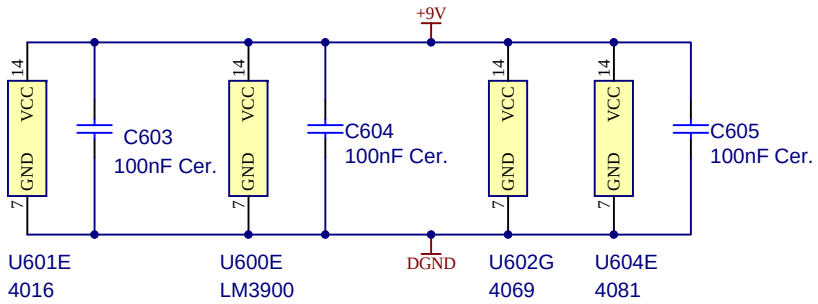

Elby Designs

9 Follan Close
Kariong
NSW 2250
Australia

Pixie - An EDP WASP Clone

Envelope Generator for VCA

Size	FCSM No.	DWG No.	Rev
A4	29/04/2011	VCA-EG.s06	1
Scale	Laurie Biddulph	Sheet 6 of 21	