Taken from a design by Scott Gravenhorst

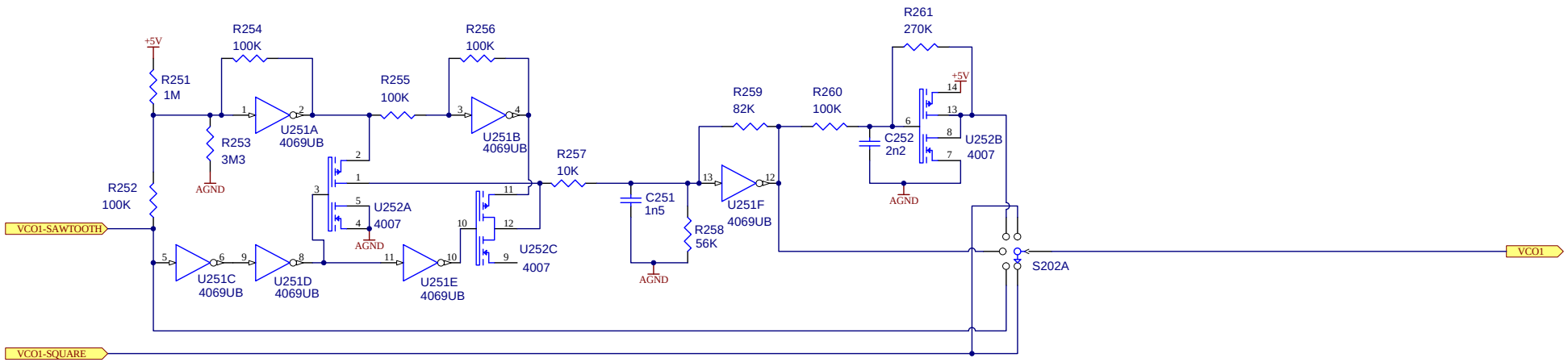

Waveform selector:-
1) Square
2) Sawtooth
3) Triangle
4) Sine
5) Modulated Square

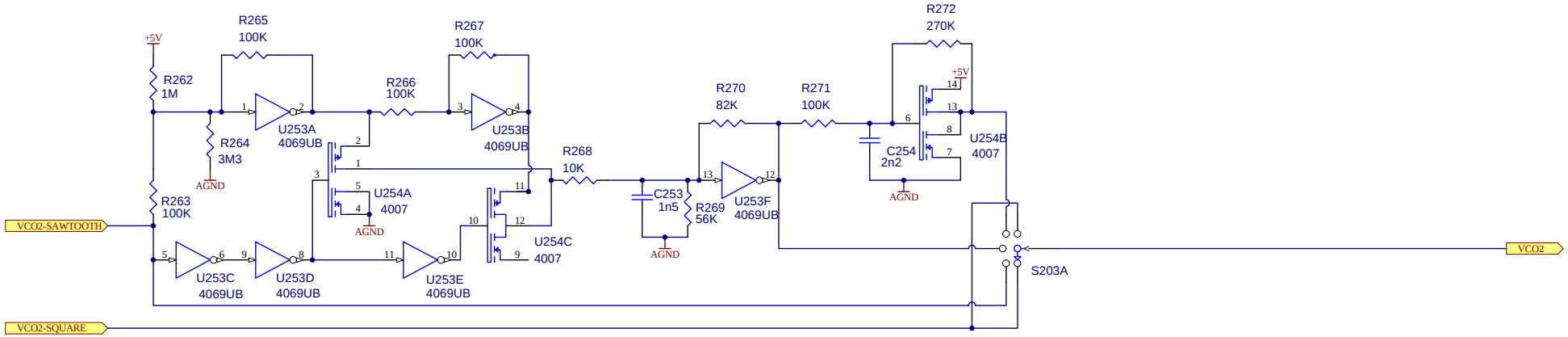

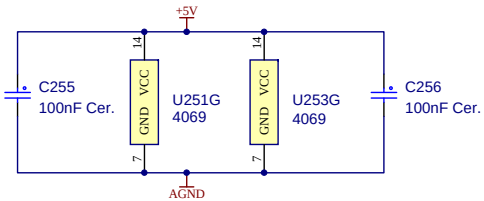

Elby Designs
9 Follan Close
Kariong
NSW 2250
Australia

Pixie - An EDP WASP Clone

Triangle Generator

Size	FCSM No.	DWG No.	Rev
A3	24/03/2008	Triangle.s18	1
Scale	Laurie Biddulph	Sheet 18 of 21	