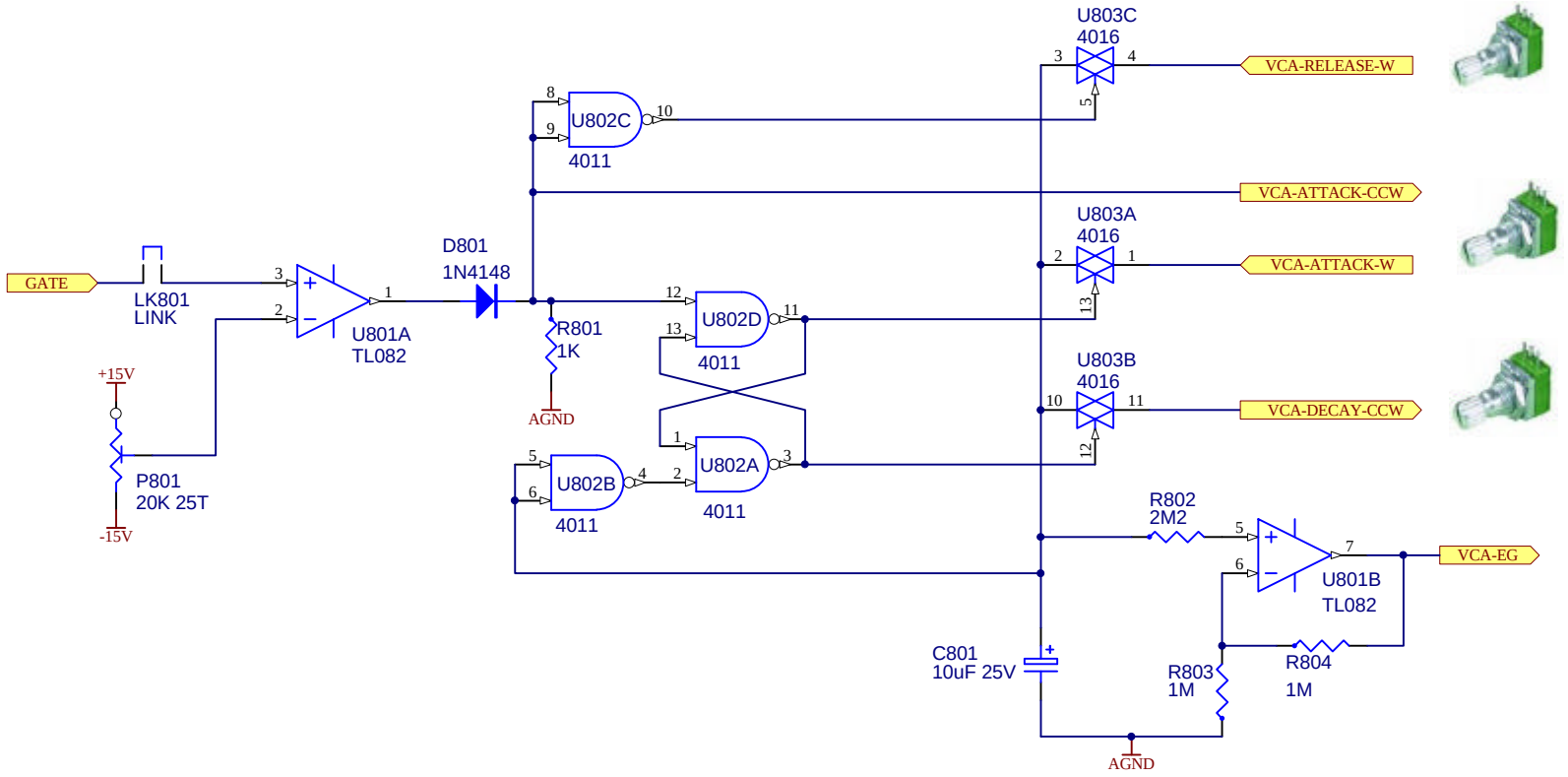

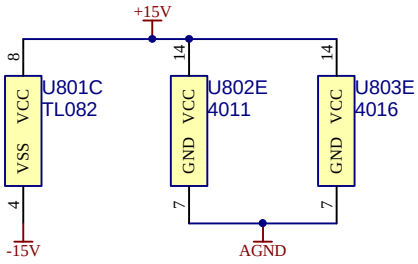

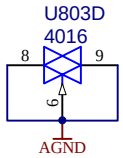

Elby Designs

9 Follan Close
Kariong
NSW 2250
Australia

MonoWave (X) - A Rebuild

Reproduced with permission from Paul Maddox

Envelope Generator for VCA

Size	FCSM No.	DWG No.	Rev
A4	3/09/2006	vcaeg-08.schdoc	
Scale	Laurie Biddulph	Sheet 8 of 14	