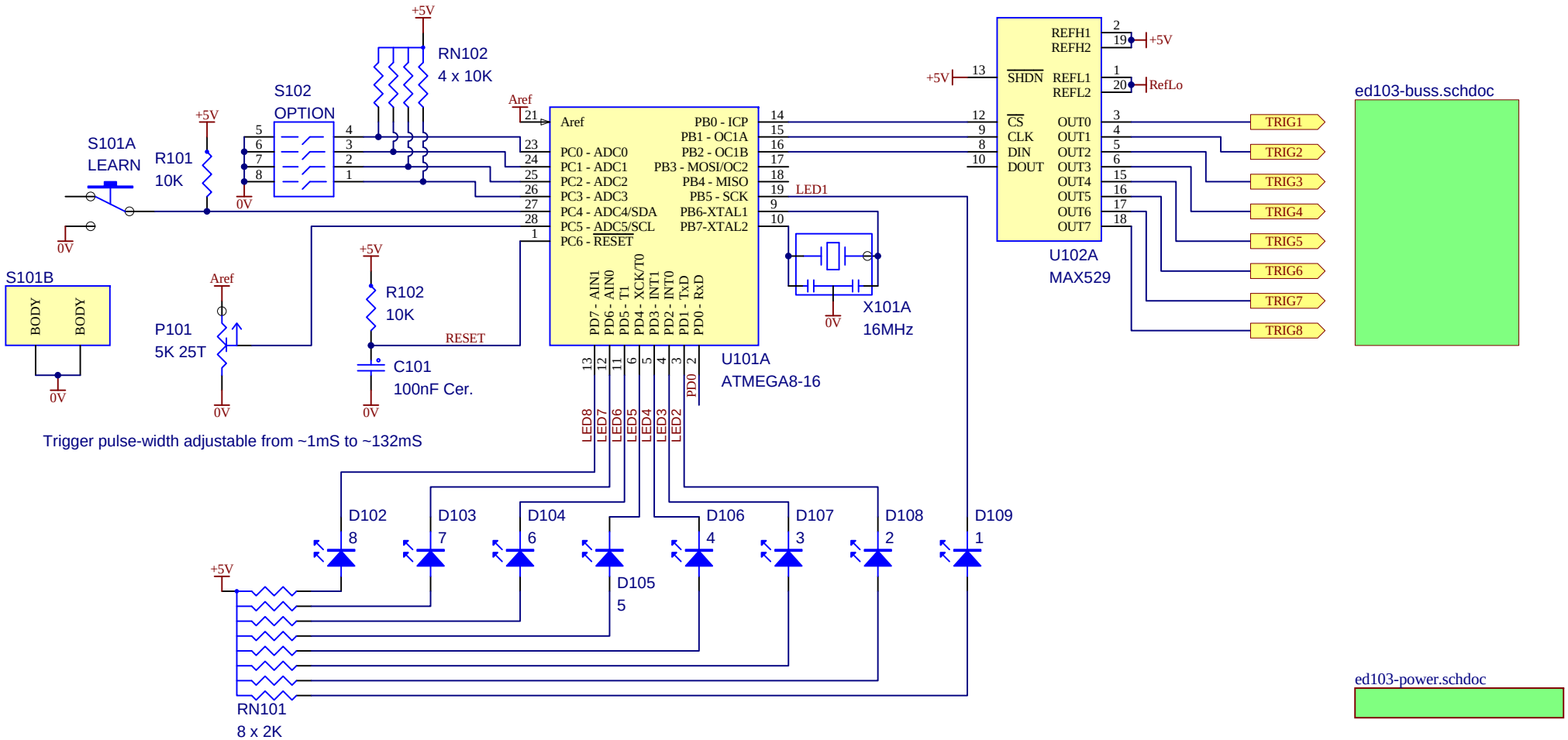

Elby Designs

9 Follan Close
Kariong
NSW 2250
Australia

ED103 - MIDI2SDS

Based on MIDI2SDS by Paul Maddox

Main Circuit

Size	FCSM No.	DWG No.	Rev
A4	10/11/2007	ed103-main.schdoc	1
Scale	Laurie Biddulph	Sheet 1 of 3	

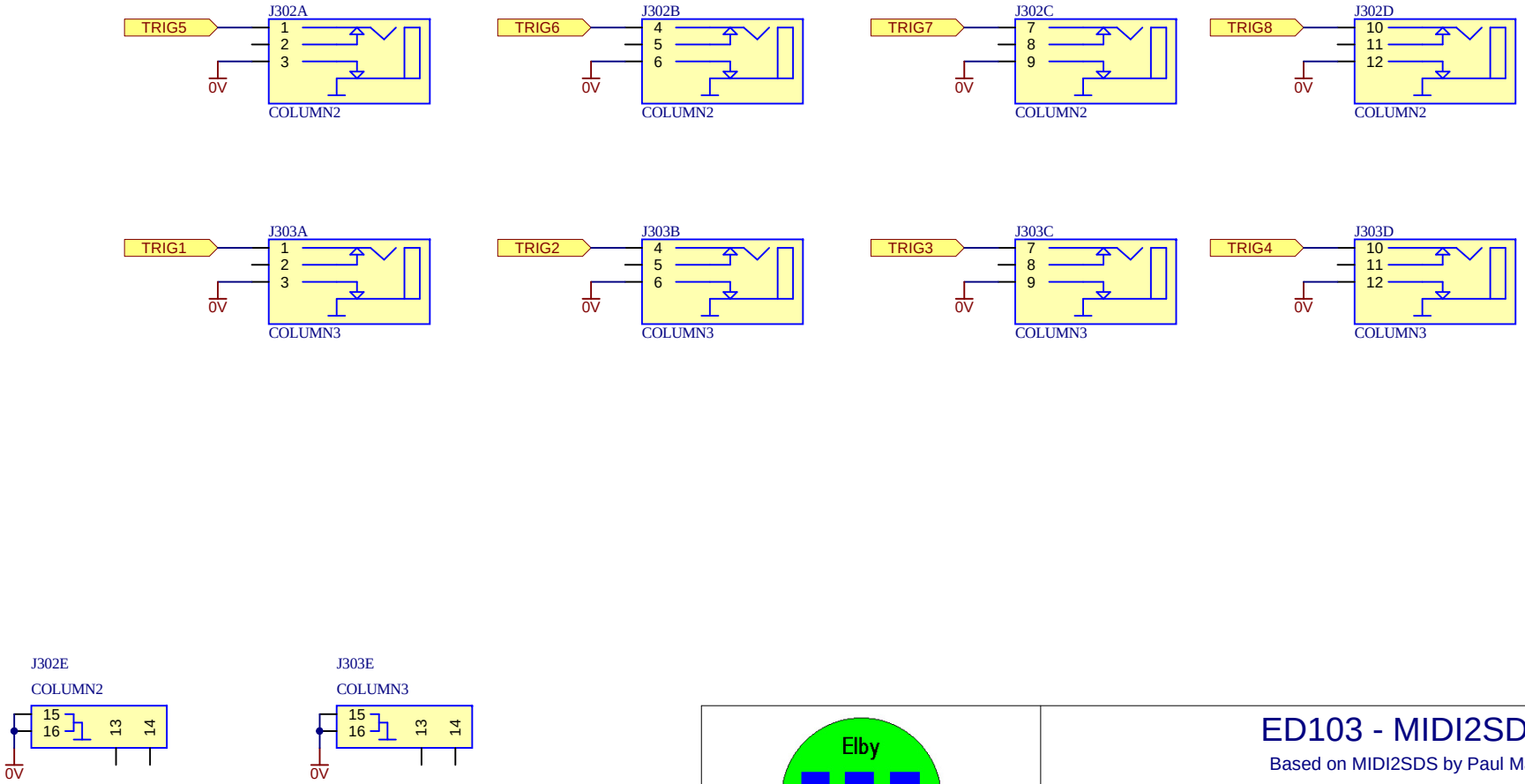

Elby Designs

9 Follan Close
Kariong
NSW 2250
Australia

ED103 - MIDI2SDS

Based on MIDI2SDS by Paul Maddox

Buss Connections

Size	FCSM No.	DWG No.	Rev
A4	10/11/2007	ed103-buss.schdoc	1
Scale	Laurie Biddulph	Sheet 2 of 3	

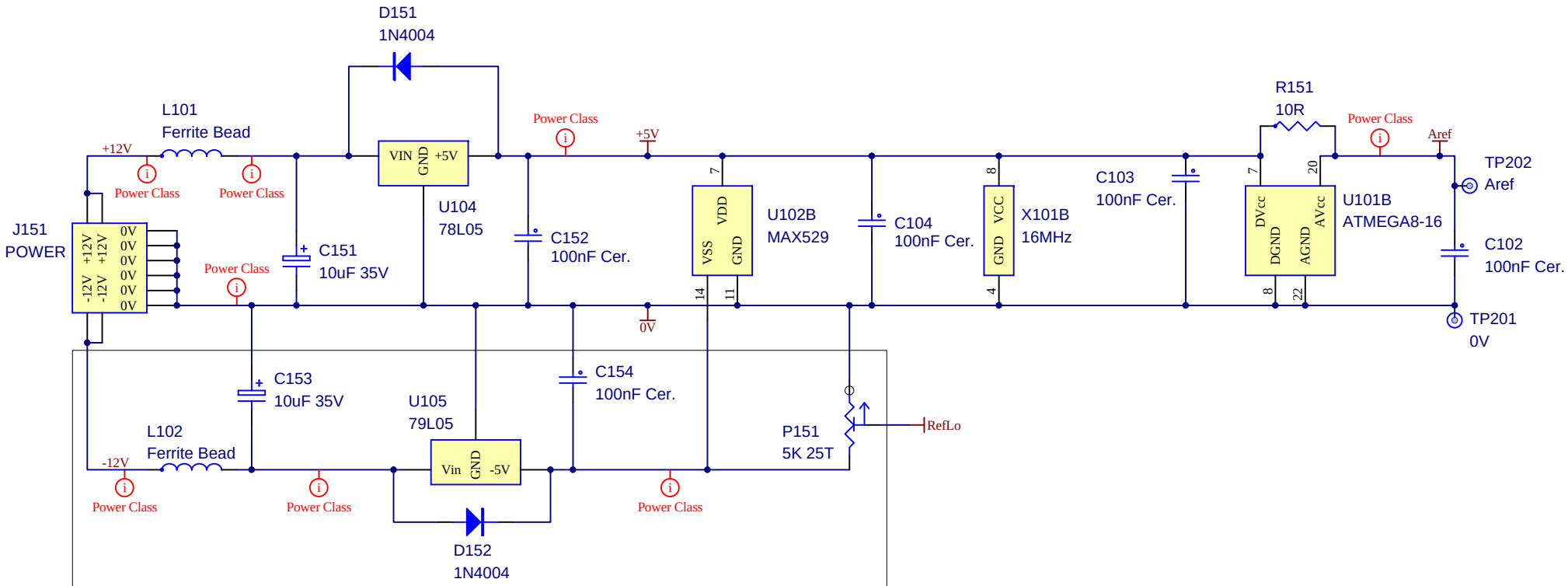

For an original MISI2SDS remove all of the negative power supply circuitry.
Connect RefLo to 0V
Place a wire link across C154

Elby Designs

9 Follan Close
Kariong
NSW 2250
Australia

ED103 - MIDI2SDS

Based on MIDI2SDS by Paul Maddox

Power Supply

Size	FCSM No.	DWG No.	Rev
A4	10/11/2007	ed103-power.schdoc	1
Scale	Laurie Biddulph	Sheet 3 of 3	

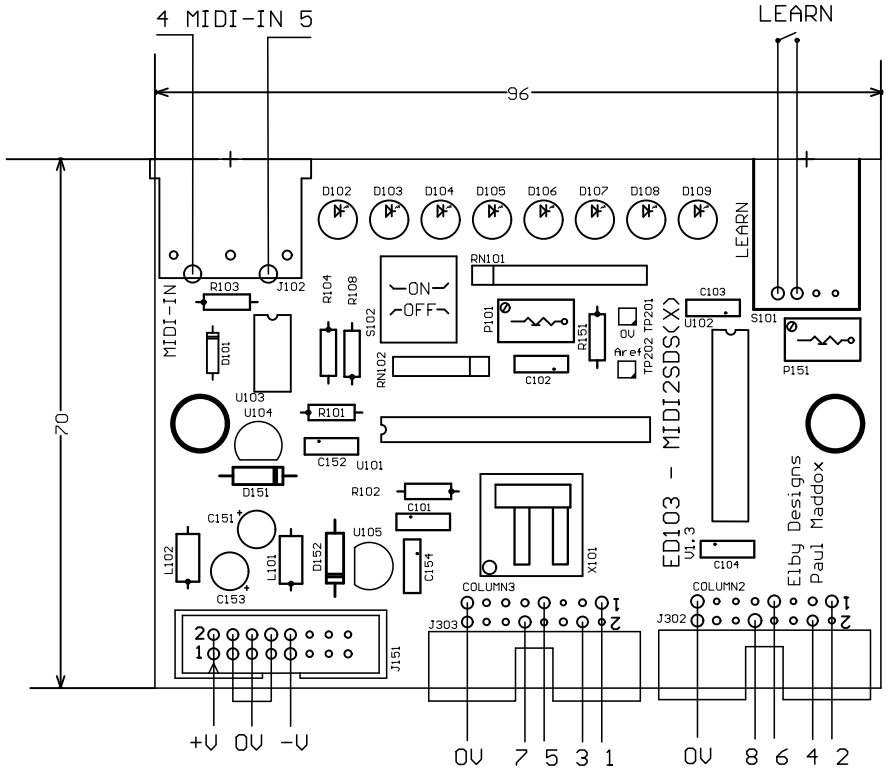

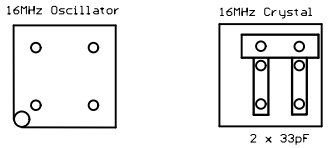

Options for X101

RoHS compliant - Immersion Gold over Immersion Silver

White silk-screen

FR4, 1.6mm thick

Green solder-mask to 2 sides

Finished external copper weight 1oz

Elby Designs
Kariong, NSW 2250
Australia
www.elby-designs.com

ED103 - MIDI2SDS
PCB Details

All dimensions in millimeters unless stated otherwise.

(A4) Not to scale

Rev: 1.3

Date: 29/09/07