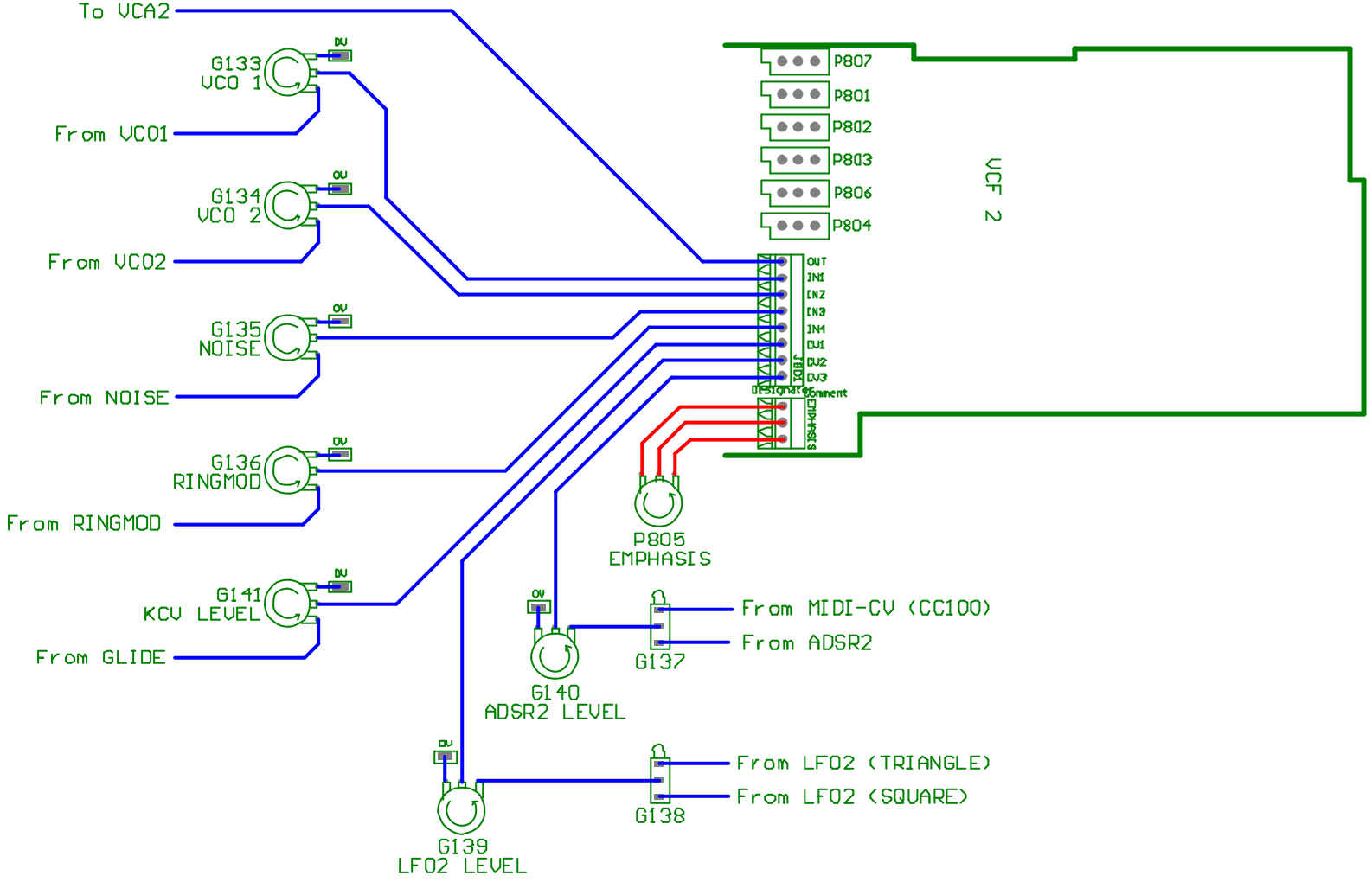

Components viewed from rear

Elby Designs
Kariong, NSW 2250
Australia
www.elby-designs.com

ASM-2 VCF 2 Wiring Details

All dimensions in millimeters unless stated otherwise.

(A4) Not to scale

Rev: 1

Date: 29/12/04